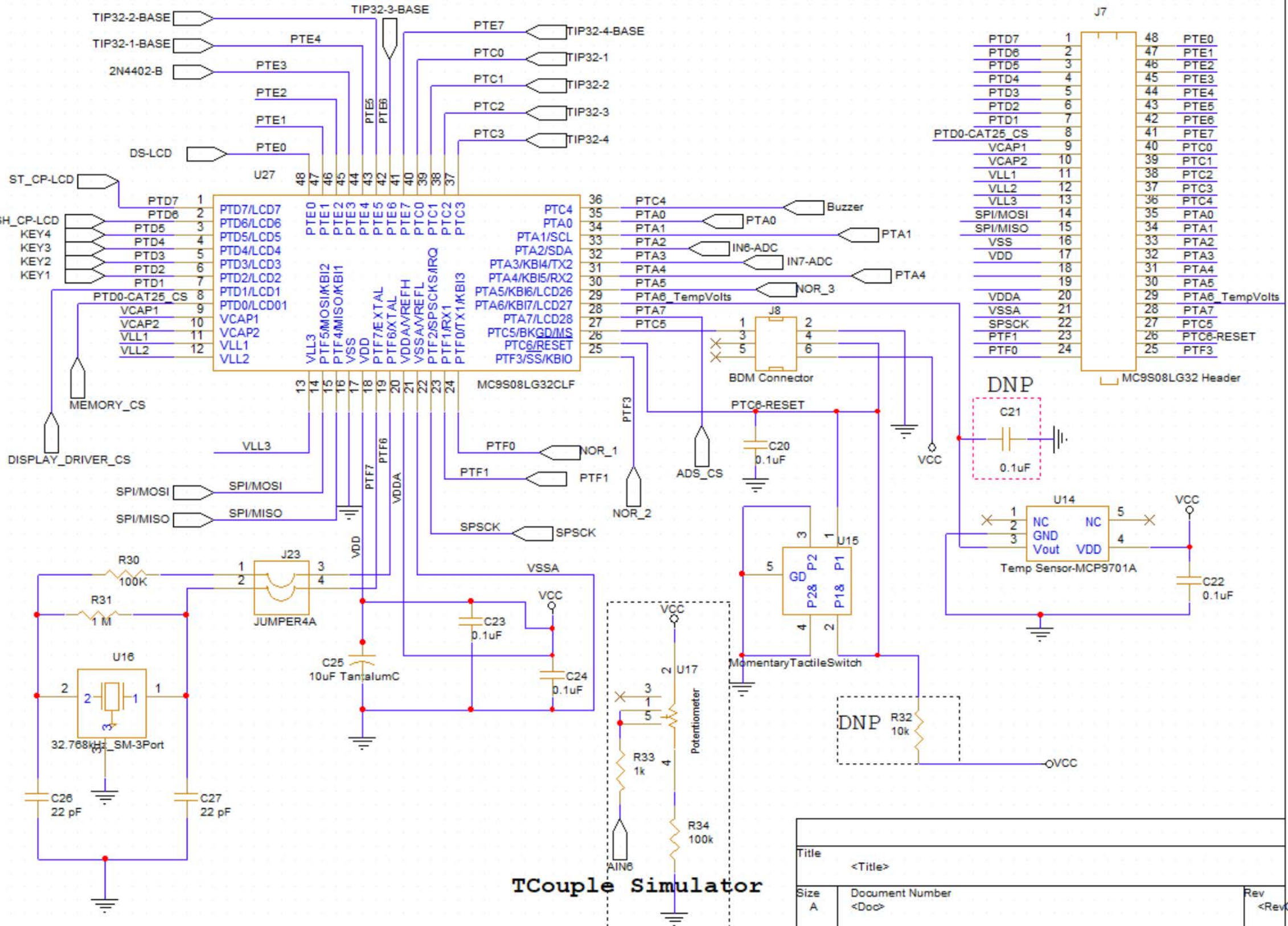
TIP32-2-BASE
TIP32-1-BASE
2N4402-B
DS-LCD
ST_CP-LCD
KEY4
KEY3
KEY2
KEY1
MEMORY_CS
DISPLAY_DRIVER_CS
SPI/MOSI
SPI/MISO
U27
MC9S08LG32CLF
TIP32-3-BASE
TIP32-4-BASE
TIP32-1
TIP32-2
TIP32-3
TIP32-4
Buzzer
PTA0
PTA1
IN6-ADC
IN7-ADC
PTA4
NOR_3
NOR_1
NOR_2
PTF1
SPSCK
ADS_CS
BDM Connector
J8
J7
MC9S08LG32 Header
PTC6-RESET
C20
0.1uF
C21
0.1uF
DNP
U14
Temp Sensor-MCP9701A
C22
0.1uF
U15
MomentaryTactileSwitch
R30
100K
R31
1 M
J23
JUMPER4A
C23
0.1uF
C24
0.1uF
C25
10uF TantalumC
U16
32.768kHz_SM-3Port
C26
22 pF
C27
22 pF
VSSA
VCC
U17
Potentiometer
R33
1k
R34
100k
AIN6
R32
10k
TCouple Simulator
Title
<Title>
Size
A
Document Number
<Doc>